GreenBridge
FURNISHINGS

H2O COLLECTION

Chaise Lounge

DIMENSIONS

L 81"(205.74cm)
W 27"(68.58cm)
H 33.5"(85.09cm)

SH 14"(35.56cm)

SIDE VIEW

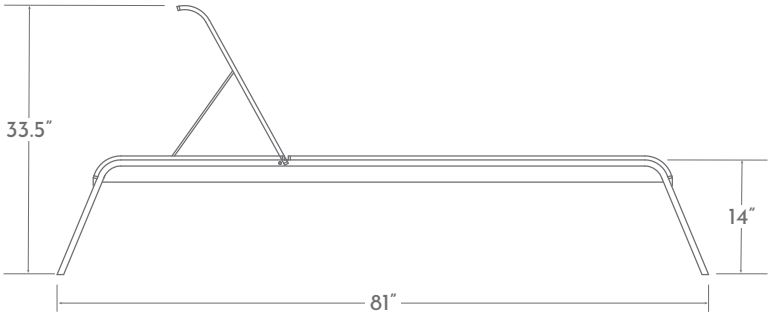

FRONT VIEW

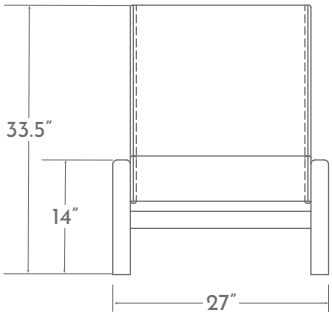

DESCRIPTION

Powder coated aluminum frame with synthetic sling; foot caps and/or nylon glides. Stackable.

MATERIALS

FRAME

SLING

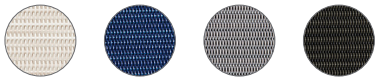

THIS PRODUCT IS DESIGNED AND MANUFACTURED EXCLUSIVELY BY/FOR GREENBRIDGE HOSPITALITY LLC. ANY RE-PRODUCTION OF THIS PRODUCT OR USE OF THIS DOCUMENT - WITHOUT WRITTEN CONSENT OR ROYALTY AGREEMENT- IS ILLEGAL AND WILL BE PROSECUTED TO THE FULL EXTENT OF THE LAW.